PACKBURN AUDIO NOISE SUPPRESSOR

MODEL 323 AA

MODEL 323 A WITH REPLACEMENT BOARDS

A single-ended noise suppressor designed to eliminate or reduce noises due to imperfections in and damage to sound recordings in all analog audio media,

including cylinder, disk, film wire and tape recordings, monophonic and stereophonic.

It is also applicable to broadcasts, digital tapes and CD records from these sources.

It is designed for both audiophile and professional use.

Model 323AA contains three processors designed to suppress transient noises (ticks, pops, clicks, crackle, scratch) encountered in some 100 years of phonograph recordings, wherever and however made, as well as the audible hiss familiar in all audio media prior to the development of successful encode/ decode noise suppression systems and, more recently, digital audio.

Model 323AA also incorporates a number of necessities and conveniences for the optimum playback of disk and cylinder recordings and for the achievement of optimum results with the Audio Noise Suppressor.

The Switcher:

The first noise reduction processor in the Audio Noise Suppressor is the Switcher. This is designed specifically for the reduction of noises from monophonic disk and cylinder recordings, taking advantage of the redundancy that exists in these media: the same signal is engraved on each of the two side walls of the groove. However, the distribution of particulate matter in the record material (one cause of noise) is random. Also, dirt, mildew and scratches do not affect each side wall identically.

Prior to the development of the Packburn Switcher, a monophonic disk or cylinder, if played back with a stereophonic reproducing system, was best played by summing (in the appropriate polarity) the signals from the left and right channels. The Switcher does this, also, in the rest position. However, at any moment when the reproduction from the left or right channel is quieter (in the sense of more noise-free) than the sum signal, the Switcher can elect to reproduce just from the quieter groove wall. The Switcher can switch between these three possibilities at a very rapid rate with astonishing results. At lower frequencies (from 300 Hz down), where switching would not accomplish anything, the two channels are mixed to minimize rumble.

The idea of using the Switcher on vertical-cut recordings may seem strange, but the playback stylus does ride on the side walls of the groove, moving vertically with the vertical modulation. The Switcher does not have as much effectiveness, and cannot be turned up as far, for vertical recordings, but it has a part to play.

The switching process is *generally* not applicable for noise reduction of stereophonic records or of monophonic tape recordings or broadcast. For these, transient noise suppression must be achieved by the Blanker alone.

The Blanker:

The second noise reduction processor is the Blanker. This is designed to cope with transient noises from any source: whether from the output of the Switcher, where noises remain that were common to both side walls of the groove, or from a stereophonic disk recording. Also, it is applicable to a monophonic tape, a broadcast or a CD record of a disk recording that has transient noises. Note that the Packburn Blanker works from any program source, in contrast to some devices that require the vertical component of a stereophonic disk to trigger their action.

The Blanker clips the amplitude of each individual positive-going or negative-going pulsation of the noise transient whenever it exceeds a threshold value determined

by the peak program level in the vicinity of the transient.

The Switcher plus the Blanker comprise the Transient Noise Suppressor of the Audio Noise Suppressor.

The Continuous Noise Suppressor:

The third noise reduction processor reduces audible hiss-or white noise, whatever one prefers to call it. It is a constant annoyance in just about every cylinder, disk, wire, analog tape or film recording made prior to the development of successful encode/ decode systems of noise suppression, followed by digital mastering.

This noise is perceived by the human ear as being of a fairly continuous nature in contrast to the pops, ticks, and clicks of transient noise and therefore, we call our third processor the Continuous Noise Suppressor. This processor comes third because it is expeditious to suppress the transient noises first. In the case of recordings containing no transient noise, such as analog master tapes and copies thereof, the Continuous Noise Suppressor will be the only one needed.

The Continuous Noise Suppressor is a variable low-pass filtering circuit that responds in accordance with the nature of the program material. When the program material is quiet and contains little in the way of high frequency energy, a circumstance in which the high frequencies that the listener is aware of are almost entirely those in the noise, the cutoff frequency of the filter closes down to its lowest value. In loud and/ or brilliant passages, when the signal is effectively making the noise, the cutoff frequency assumes intermediate values. The operator has control of the extent to which the filter closes down and opens up, so that a substantial reduction of hiss can be achieve without audible degradation of the program material and without the swishes and pumping that have been the undesirable by-product of similar devices.

FACILITIES ADDITIONAL TO AND SUPPORTIVE OF THE NOISE REDUCTION PROCESSORS

A number of necessities and conveniences are assembled to the Audio Noise Suppressor to assist the user in achieving optimum performance with disk and cylinder playback as well as other signal sources, as follows:

Playback from either channel:

There is the ability to play from either channel separately of a monophonic disk or cylinder with the lower frequencies of the two channels mixed so as to eliminate rumble. This is a necessity in reproducing those occasional recordings in which one side wall is consistently noisier than the other. Such a condition can indicate that the optimum stylus is not being used, but some recordings persist in this behavior with any stylus that one may try. In the case of such recordings, it is preferable to play from the quieter side wall of the groove and just use the Blanker for transient noise suppression

Metering of the input:

The two input channels are metered to assure that the proper signal levels are provided to the Audio Noise Suppressor Metering takes place after the input level control and before the channel balance control.

Channel balance control and audition of difference signal:

The balance control is needed for balancing of signals into the Switcher when playing monophonic disk or cylinder recordings. In reproducing vertical-cut recordings, the balance control also serves as a canting control. Audition of the difference signal as well as of the sum signal allows one to set the channel balance or canting adjustment with accuracy.

Enhance/ Suppress Switch:

This switch enables selection of either the quieter or noisier groove wall by the Switcher. It is useful for demonstration and diagnostic purposes. Also, in the case of a full-width monophonic tape recording in which the oxide is flaking off, one can play it with a two-track head and use the Switcher to choose the momentarily louder channel and thus avoid dropouts.

Transient Noise Suppressor can be switch out:

The Switcher plus the Blanker, which constitute the Transient Noise Suppressor, can both be switched out by means of a single toggle switch whenever one wishes to process a recording only through the Continuous Noise Suppressor.

Six position treble equalization switch:

This allows selection of the commonly used treble equalization curves for 78s as well as for those long playing records that were manufactured prior to the recording industry's standardization on the RIAA curve in 1953. Also includes the RIAA curve.

Fixed cutoff:

A convenience in reducing hiss from exceptionally noisy recordings, where the dynamic action of the Continuous Noise Suppressor may not give satisfactory results. At a cutoff rate approaching 12 dB/ octave, this is not designated as an optimum filter device for this purpose but as an available convenience for those who do not have a sharp cutoff filter.

Cutoff frequency meter:

This meter displays the ever-fluctuating value of the cutoff frequency when the Continuous Noise Suppressor is operating. Also displays the adjustment of the fixed cutoff filter when it is in use.

Bypassing the Audio Noise Suppressor:

The Audio Noise Suppressor is provided with a bypass relay. This connects the output terminals to the input terminals when the power is OFF or when the ANS IN/OUT switch is in the OUT position. Thus, the Audi Noise Suppressor is easily removed form the circuit when it is not needed.

SOME USERS OF THE PACBURN AUDIO NOISE SUPPRESSOR

Australia: Australian Broadcasting Corp, *Australian National Library; Vintage Productions

Canada: National Museum of Man; National Library of Canada; Country Radio Program

Denmark: Der Danske Jazz Center

Finland Suonen Aanitearkisto; Oy Yleisradio Ab; Musiiki Fazer Oy

France: Bibliotheque Nationale, Pathe-Marconi EMI

Germany: Deutsches Rundfunkarchiv; EMI-Electrola

Hungary: Hungaroton Gramophone Records

Netherlands: Stichting Granny's Records

New Zealand: Radio New Zealand

Switzerland: Fonoteca Nazionale Svizzera

United Kingdom: EMI Records; BBC Enterprises; BBC Radio Engineering Services; * British Museum; Imperial War Museum; Interstate Music LTD.; Ulster Folk and Transport Museum

USA: Industry: *CBS Records; RCA Records

Institutional: American Publishing House for the Blind; Country Music Foundation; Hunter College: *National Archives and Record Service; *Rodgers and Hammerstein Archive of the New York Public Library; Sarasota Opera Society; Stanford Univ. Audio Archives; Univ. of Texas; *Yale Univ. Collection of Historical Sound Recordings; WUTR (Utuado PR)

Producers: Conductart (N.Y. City); Educational Media Associates (Berkeley CA); Kiner Enterprises (Redmond WA); Lane Audio & Records (Vista CA); Mark46 Records (Anaheim CA); H. Ward Marston, IV (Wayne, PA); Murray Kent Productions (Cedar Rapids IA); Art Shiffrin (Little Neck NY); Steven Smolian Sound Studios (Potomac MD); Jack Towers (Hyattsville MD)

* Indicates two or more installations

APPLICATION NOTES

78s: The success of the Audio Noise Suppressor is most spectacularly demonstrated with noisy 78 rpm disks, as these present a continuous stream of ticks, pops, etc. the suppression of which is immediately demonstrable. The same applies to excessively ticky, scratchy or dirty 45s and long play disks. You can instantly hear how the Switcher reduces the crackle. Next you can turn on the Blanker and hear the major role that it plays in eliminating or reducing noise from scratches and cracks. Then you can adjust the Continuous Noise Suppressor for the final improvement. You can even operate the ENHANCE/SUPPRESS switch and hear the effect of choosing the noisier groove wall.

Long Play and Stereo Disks: The improvement of these requires more patient observation as, if they have not been abused, these have only occasional and unpredictable pops, some of which, however, can reproduce as loud as a pistol shot. The Blanker reduces the pistol shots to innocuous thumps. Lesser noises are turned into slightly noticeable thuds when they are not totally eliminated. The Continuous Noise Suppressor effectively and unnoticeably reduces the hiss.
45s and polystyrene long play records, with their higher hiss level, are nicely served by the Continuous Noise Suppressor.

Acetates: These can range from worn and deteriorating disks to extremely quiet, mirror-surfaced beauties. The difficult ones behave like bad 78s, the good ones like fine long playing disks, as far as operation of the Audio Noise Suppressor is involved.

Vertical-cut Recordings: This includes acoustical disks and cylinders and electrical broadcast transcriptions. Both the Switcher and Blanker have a major effect in reducing transient noises from the broadcast transcriptions. With acoustical disks and cylinders the Blanker plays the major role in reducing the transient noises. The Switcher can be turned up slightly for some assistance in the noise reduction. The Continuous Noise Suppressor can be applied to good effect in reducing the remaining hiss.

78 Transfers to tape or long playing records: Many tape copyists and record producers mistakenly transfer 78s with the RIAA curve, which reduces surface noise but also takes much of the life out of the sound of a voice or instrument. In playing back from such a source, one can use the treble equalization facilities provided by the Audio Noise Suppressor to restore the correct equalization and then proceed to suppress the noises in the proper manner.

Analog Master Tapes: The Continuous Noise Suppressor is very successful at unobtrusively reducing the hiss level of analog master tapes or copies thereof.

CDs: We claim no applicability of the Audio Noise Suppressor to CDs mastered from original digital tapes. However, CDs derived from 78s, from old movie sound tracks or from master tapes that antedate the introduction of encode/decode noise reduction devices all are instances where the Audio Noise Suppressor has a role to play, whether on the part of the CD producer or the consumer. If the producer chooses to ignore what the Audio Noise Suppressor can do to improve his product, the consumer can do it on his or her own!

Broadcast reception in general can benefit from use of the Continuous Noise Suppressor if there is audible hiss, whether the source of the hiss is in the program material or in the conditions of the reception. Broadcasts of historical material, if equalized with the RIAA curve (as it often is) can be corrected and transient noises can also be suppressed.

Regarding copies, In general: The Blanker has to be relied on to provide whatever transient noise suppression is to be achieved. However, it must be recognized that recordings processed into long playing disks or into radio broadcasts are subject to equalization, compression and limiting and probably are also several copying generations removed from the original. All of these circumstances can tend to soften the leading edge of a noise transient with the result that the detectability of the noise transient by the Blanker circuit is lowered. Thus, as a general rule, the Transient Noise Suppressor will be at its most effective when it can be applied to the original recording.

The Continuous Noise Suppressor will not be affected in the same way. It will just have more to do as the copying processes create a hiss buildup.

Carefully made stereo tape transfers of a monophonic disk or cylinder—especially a digital tape—can provide good results, as the Switcher can be employed and there should be no appreciable degradation of the noise transients that would reduce the effectiveness of the Blanker.

Record Restoration: Application of the Continuous Noise Suppressor is best deferred to the final stage of processing by those doing record restoration. In such applications, one would use the Transient Noise Suppressor at the start. After filtering, equalization, volume expansion, adding reverberation, etc., one can then use the Audio Noise Suppressor a second time, this time by-passing the Transient Noise Suppressor and using only the Continuous Noise Suppressor.

Quadraphonics — Surround Sound — Ambience Systems — Electronic Reverberation: The spatial illusion of these systems is seriously degraded when pops and "pistol shots" disclose the presence of the ambience loudspeakers. With the Audio Noise Suppressor one can even play 78s without any loss of the spatial illusion

PACKBURN®

Audio Noise Suppressor Model 323 AA Technical Specifications

Designed for professional installations and for quality home sound systems

Outfitted to interface with 600 ohm balanced line systems or with the more customary single-ended Hi Fi systems; Provided with XLR professional connectors as well as with RCA-type phono connectors for all signal input and output terminations.

Power Line Voltages: Two models: U.S./ Canadian 105 volts 120 volts, 50/60 Hz

International: 210 volts-240 volts, 50/60 Hz

Power Consumption: 20 Watts

Size: Width: Designed for 19" (483 mm) wide rack mounting
Depth: 10" (254 mm) Height: 7" (178 mm).

Inputs and Outputs: There are two separate electronically balanced input channels. Separation throughout the audio frequency range is maintained in processing stereo signals, in which each signal path is provided with a Blanker, a Treble Equalization network and a Continuous Noise Suppressor and then routed through a dual OUTPUT LEVEL control to the separate output terminations.

In processing lateral-cut or vertical-cut recordings, the signals applied to the two input channels are routed through a balancing circuit to the Switcher. Or, at the operator's choice, with lateral-cut records, the signal of either channel may be individually selected for processing. To reduce the audibility of low frequency disturbances, the bass portion of the two input channels, is mixed in the proper polarity. The output of the Switcher is connected to both of the Blanker + Equalizer + Continuous Noise Suppressor channels, and the fully processed signal may be taken from either or both of the output channels.

Electronically balanced input. Single-ended input impedance is 100k ohms.

Electronically balanced output. Single-ended output impedance is less than 1 ohm.

Sensitivity: With INPUT LEVEL control all the way up, a 0 VU (1.23 v.) reading of the processing level meters will be achieved by an input signal of — 6 VU or less from a 600 ohms line or by 0.4 v. or less from a single-ended source. Range of control of INPUT LEVEL potentiometer is 20 db.

With OUTPUT LEVEL control all the way up, there is unity gain from the metering circuit to the output terminations.

Frequency Response: Bass response is within ± 1/2 db to 10 Hz.

Treble response is determined by the setting of the Treble Equalization switch and the action of the Continuous Noise Suppressor.

Treble Equalization: is provided by the Audio Noise Suppressor by means of a six-position selector switch which enables you to match the treble portion of published equalization curves of records, old and new. Includes FLAT, FFRR, AES, RIM, LP.

Continuous Noise Suppressor Action: The Continuous Noise Suppressor is a low pass filter. Cutoff frequency varies from 3 kHz to 15 kHz in accordance with the dynamics of the program material and the nature of the surface noise. Alternatively, a fixed cutoff frequency may be selected. Meter on front panel reads the cutoff frequency. Filter has a slope approaching 12 db per octave.

IM Distortion: 60 Hz and 7 kHz, 4:1 at + 4 vu (1.23v.) input: Less than .05%

S/N Ratio: (Unweighted) – At least 75 dB with reference to + 12 vu (3 v.).

Warranty: A full five year's warranty on both parts and labor.

Servicing: Plug-in circuit boards and plug-in integrated circuits facilitate servicing.

About your Record Playback Equipment: To take advantage of the Switching process, you must have equipment to play back discs or cylinders stereophonically. The two channels of reproduction must be closely matched in frequency response.

Demonstration Cassette or CD: Available on request

PACKBURN® *electronics inc.* **P.O. Box 226 Syracuse, NY 13215 U.S.A.**

Ph 315-476-9121

Covered by one or more of the following US patents: 4,322,641; 7,035,417; other patents pending.

TABLE OF CONTENTS

Foreword

We appreciate your purchase of our Audio Noise Suppressor, and we want this unit to work for you as well as it has for us in the time that we have spent with it, carefully listening to its performance with test records and with other records that we have listened to purely for pleasure. No unit leaves our premises without at least a full evening of listening or its equivalent during the one week's continuous run-in that each unit undergoes.

This instruction manual covers the application of the Audio Noise Suppressor to all recording media with which we have had experience. It also describes the alignment of your equipment that forms an important part of the total system. And it deals with various special uses and adjustments.

This material does not all have to be studied and digested before first using the Audio Noise Suppressor: amateurs and audiophiles who have had experience with playing old records, and who already possess a reasonably well-adjusted system for playing lateral-cut 78 rpm records stereophonically, usually get the unit quickly connected and working and proceed to "enjoy".

The Audio Noise Suppressor employs three separate processors for reducing noise in the reproduction of records or other sources of sound. It also has a six-position treble equalization selector switch.

The first process that a signal from a lateral-cut monophonic recording undergoes is the Switcher process. Next, the signal is processed through a Blanker for further reduction of transient noises. These two processors are referred to collectively as the Transient Noise Suppressor. The Transient Noise Suppressor can be switched in and out as a unit by means of the TNS IN/TNS OUT switch. The signal is next routed through the treble equalization (ROLLOFF) selector switch and finally processed

through the Continuous Noise Suppressor and output amplifier.

The entire Audio Noise Suppressor may be switched out of the circuit by means of the ANS IN/ANS OUT switch.

As the Switching function is not applicable to stereophonic recordings, the Switcher is bypassed and each channel of a two channel stereophonic signal is routed through its own Blanker and Continuous Noise Suppressor when switched for stereo operation.

In the case of many 78 rpm records, with their persistent crackle and ticks, the operation of the Transient Noise Suppressor is easily demonstrated by the flip of a switch. In the case of a fine record, with only an occasional tick, you will be much less aware of the success of the Transient Noise Suppressor, as only the occasional flash of an LED will indicate the presence of those ticks that have been completely eliminated, whereas other ticks will reproduce with much reduced loudness. As you gain experience and confidence in its operation, you will learn that the Transient Noise Suppressor is perpetually on guard, acting to suppress noises as they occur.

The operation of the Continuous Noise Suppressor is always easy to observe, as the hiss that it is designed to remove is steady.

For general listening you will probably develop preferred settings of the controls for various categories of records. For meticulous copying of records, you will want to check for individual adjustments for each recording.

It must be recognized that the Audio Noise Suppressor is but one component of a system. The other components are supplied by you, and they must be in proper adjustment and balance, especially if the Switcher is to be optimized. So, we have

taken the trouble to give you an extensive coverage of the adjustments necessary in your equipment and have also added a section describing trouble-shooting procedures.

We will always be interested to hear from you regarding any triumphs - or difficulties - that you may experience in the use of this equipment.

Installation of the Audio Noise Suppressor

A. The Turntable

For proper functioning of the Switcher with monophonic phonograph records, a stereophonic playback cartridge must be used and its connections and wiring to the stereo preamplifier must be those for stereophonic reproduction.

B. The Pre-Amp Preceding the PACKBURN Audio Noise Suppressor:

1. Treble characteristics:

For maximum effectiveness of noise suppression in the reproduction of all types of records, there should be no treble rolloff in your stereo preamplifier. This is usually achieved if the preamplifier provides a 78 rpm equalization setting. You then establish the proper equalization for the given type of record by using the treble ROLLOFF switch provided on the Audio Noise Suppressor.

If your stereo preamplifier does not have a 78 rpm equalization curve available, and you cannot have it modified for one, try the Audio Noise Suppressor with what you have. You will not achieve the maximum of performance, but the unit will still accomplish a substantial amount of noise reduction. Otherwise, there are expedients which may be employed:

a. Install a stereo equalizer between the preamplifier and the Audio Noise Suppressor. For information on how to adjust the equalizer, refer to Installation of a Stereo Equalizer Before the Audio Noise Suppressor in the Table of Contents.

b. Consult the factory. The PACKBURN Audio Noise Suppressor has a factory-settable feature that compensates for, and permits the more optimum

use of, a pre-amplifier having an RIAA rolloff characteristic. Once this feature has been factory activated, it may be optimum to then not use a pre-amplifier with a flat (78 rpm) rolloff characteristic.

c. Install a pair of passive equalizers between the preamplifier and the Audio Noise Suppressor. For an example of a design, refer to Installation of a Passive Equalization Network Before the Audio Noise Suppressor in the Table of Contents.

2. Bass characteristics:

The bass turnover and shelf characteristics of your preamplifier are not critical to the operation of the Audio Noise Suppressor, as the unit mixes the input channels of the lower frequencies (when processing monophonic recordings), the crossover occurring at 300 Hz. In fact, you may use your bass tone controls to reduce rumble or other low frequency disturbances without upsetting the Switcher action.

C. Equipment Followinq the PACKBURN Audio Noise Suppressor:

Signal processing devices such as equalizers and filters may be connected to the output of the Audio Noise Suppressor for further improvement of the signal that is being reproduced.

D. Input and Output Connections to the PACKBURN Audio Noise Suppressor:

The Audio Noise Suppressor is designed to connect to professional audio installations or to typical high fidelity systems. The unit connects to the output of a stereo preamplifier or other stereo signal processing device much as one would connect a typical stereo equalizer.

For a typical high fidelity system, RCA connectors are provided for convenient connection. Single-ended (unbalanced line) systems may also be connected to either pin 2 or pin 3 of the three prong connectors, with ground connected to pin 1. In such a case it is a worthwhile precaution against noise pickup to connect the unused pin 2 or 3 to ground.

In connecting to professional audio systems with 600 ohm balanced lines, the conventional code is observed in the three prong connectors in that pin 1 is ground and pins 2 and 3 are for the signal path.

The output of the Audio Noise Suppressor is monophonic when the MODE switch is set to other than the STEREO position. Stereo signals from the input channels, which we have labeled CH.1 and CH.2, are combined by the Audio Noise Suppressor into the monaural output signal, which is fed to the output receptacles. We labeled the output receptacles CH. A and CH. B to avoid ambiguity. The identity of the output signal depends on the setting of the MODE switch. When the MODE switch is set to STEREO, the output is stereo. CH. 1 corresponds to CH. A, and CH. 2 corresponds to CH. B.

Front Panel Layout

We have employed several organizational aids for identifying the controls on the front panel. The four vertical red lines serve to distinguish among the three separate noise reduction processors that make up the audio noise suppressor. We have labeled in red lettering the controls or switches that pertain to the noise reduction functions. Black lettering pertains to those controls or switches that adjust the signals to or from the noise reduction processors. Three different sizes of knobs also help with rapid identification and ease of operation of the controls.

A. Switcher Controls:

The Switcher is the first noise reduction processor. The Switcher reduces pops and clicks, and may reduce hiss if made up of a succession of small clicks, Referred to as transient noise. Switcher controls are located between the first two vertical red lines. The controls consist of three vertically-arranged LEDs, a CHANNEL BALANCE control, a RATE control, and an ENHANCE/ SUPPRESS switch.

B. Blanker Controls:

The Blanker is the second noise reduction processor. The Blanker is a complimentary strategy for reducing transient noise. The Switcher and Blanker collectively are the Transient Noise Suppressor. Blanker controls are located between the second and third vertical red lines. The controls consist of an indicator LED for each of CH.1 and CH.2, a BLANKER RATE control, and a BLANKER ON/ BLANKER OFF switch.

C. Continuous Noise Suppressor Controls:

The Continuous Noise Suppressor is the third noise reduction processor. The Continuous Noise Suppressor reduces hiss, referred to as Continuous Noise. Controls are located between the third and fourth vertical red lines and consist of a Frequency Meter, FIXED/ VAR. switch, CONTROL DYNAMICS control, and MINIMUM ADJUST control.

(Note that when the Audio Noise Suppressor Model 323 A is upgraded with new circuit boards to become Model 323 AA, the FIXED ADJUST and the MAXIMUM ADJUST controls are unnecessary. Adjusting either has no effect on the processor.)

D. Input Controls:

At the extreme left are the two VU meters that are used to indicate the input levels to the noise reduction processors. The INPUT LEVEL control sets the input signals for correct meter readings. The TNS IN/ TNS OUT switch enables or disables operation of the Transient Noise Suppressor, i.e., Switcher and Blanker processors. The MODE switch selects the program source to be processed.

E. Rolloff Control:

Under the Blanker section is the treble equalization switch, which is calibrated in terms of “dB rolloff at 10 KHz.” It attenuates the high frequencies after the signal is processed through the Transient Noise Suppressor section.

F. Output Controls:

At the extreme right is the OUTPUT LEVEL control that sets the signal at the CH. A, CH. B outputs to levels that are convenient for the user. The POWER ON/ OFF switch turns AC power to the Audio Noise Suppressor ON or OFF. The ANS IN/ OUT switch establishes whether the Audio Noise Suppressor is IN or OUT of the circuit. When either the POWER ON/ OFF switch is OFF or the ANS IN/ OUT switch is OUT, the Audio Noise Suppressor is effectively removed from the circuit. But circuit continuity is maintained by a relay that connects the CH. A and CH. B outputs to the CH. 1 and CH. 2 inputs, respectively.

The ANS IN/ OUT switch is incorporated for the convenience of the stereo user or to allow performance comparison. However, results of the comparison will be affected by the settings of the INPUT LEVEL and OUTPUT LEVEL controls and by the ROLLOFF switch. For comparison of monophonic recording that are being

processed, there are additional points to consider, logical but tricky. Refer to the page entitled Bypassing of the Audio Noise Suppressor for a discussion of these points.

The Mode Switch

Before proceeding with specific instructions for operation, some more information about what occurs in various settings of the MODE switch is of value.

In all settings of this switch, except the STEREO setting, the two channels are mixed at the lower frequencies, with a 300 Hz turnover and a 6 dB/ octave slope. This low frequency mixture pretty much eliminates the rumble component. In the CH.1 and CH.2 and LATERAL positions of the switch, the low frequency mixture is in the proper polarity for lateral-cut records and when in the VERTICAL position, the mixture is in the proper for vertical-cut records.

For normal playback, the switch should be in the position that corresponds to the type of record. But the switch is also useful for enabling you to audition the difference signal (i.e. the vertical component of a lateral-cut record or the lateral component of a vertical-cut record) in order to achieve optimum channel balance, as will be explained below.

The Switcher operation is active only in the LATERAL and VERTICAL positions of the switch. In the CH. 1, CH. 2 and STEREO positions, the Switcher is bypassed and the signal is applied to the Blanker unit and Continuous Noise Suppressor for processing.

For single channel non-disc recordings, use the STEREO position of the MODE switch.

Processing of "78" RPM Lateral-Cut Records Through the Transient Noise Suppressor Section

A. Initial Settings for the Switches and Controls:

1. OUTPUT LEVEL control at 12:00
2. INPUT LEVEL control at 12:00
3. MODE switch in LATERAL
4. TNS IN/ TNS OUT switch in OUT
5. CHANNEL BALANCE control at 12:00
6. ENHANCE/ SUPPRESS switch in SUPPRESS
7. SWITCHER RATE control fully counter-clockwise
8. BLANKER ON/ BLANKER OFF switch OFF
9. BLANKER RATE fully counter-clockwise
10. ROLLOFF switch at 0 dB
11. FIXED/ VAR. switch in FIXED
12. ANS IN/ ANS OUT switch in IN

B. Adjustment of the Input Signal Level:

Connect your phonograph with stereo pick-up cartridge and your pre-amplifier to the CH.1 and CH.2 inputs of the Audio Noise Suppressor. After the above settings have been made and a record has started playing, turn the POWER ON/ POWER OFF switch ON.

The center LED of the three Switcher LEDs should be lit steadily. The CH.1 and CH.2 panel meters should immediately register the input signals. Adjust the settings of the INPUT LEVEL control and the volume and balance controls on your preamplifier that provide proper meter readings, i.e., program peaks at or slightly beyond 0 VU and levels on the two meters tracking within 6 dB of one another. Refer to VU Meter in the Table of Contents.

C. Adjustment of the Output Signal Level:

After the input level has been adjusted for proper meter readings, adjust the OUTPUT LEVEL control to a convenient setting.

D. Adjustment of the Switcher Controls:

1. Principles of operation:

The Switcher process relies on CH. 1, CH. 2 input signals that have identical program material that differ in transient noise. This is the case for a lateral monophonic record that is played stereophonically. The two input signals are derived from the two sidewalls of the record groove, the sidewalls having identical program material. By setting the BALANCE control for equal input levels, the two signals differ only by the transient noise, since transient imperfections in the recording medium seldom disrupt both sidewalls at the same time. The RATE control adjusts the threshold sensitivity of the Switcher. The ENHANCE/ SUPPRESS switch determines whether the Switcher selects the nosier sidewall or the quieter groove wall when the level of the transient is greater than the threshold; it is normally set to *suppress* the noise. The operation of the Switcher is visible in the blinking of the three LEDs, depending on whether the Switcher has chosen CH.1, center mix, or CH. 2 for playback.

2. Balancing of the two input signals:

Put the TNS IN/ TNS OUT switch in IN. Using the MODE switch, compare CH.1 and CH. 2. If the two channels were not adjusted to volume level equality during Instruction B, readjust now for equality using the controls on your preamp and/ or the CHANNEL BALANCE control. Ignore, for the time being, any possible difference in surface noise between the two channels unless it is drastic, in which case choose another record for your initial setup. Once the signal levels of the two channels are of equal level, the tone quality should also sound equal. If this is not the case, check <u>Trouble Shooting Procedures</u>.

If you have a plurality of styli, this is the point at which to determine the optimum one for the record being played. Select the stylus that gives the least

audible noise in both channels, or for high quality work the least distortion.

3. Balancing of the two input signals (alternate method):

Another method of adjusting channel balance that is frequently more exact involves putting the MODE switch into VERTICAL and auditioning the vertical component, adjusting the CHANNEL BALANCE control for a null in the signal. If you cannot achieve good null (signal cancellation), your playback system is either not properly aligned, or you do not have the correct stylus.

Note that the signal decreases greatly in intensity when you switch from LATERAL TO VERTICAL, but the ticks do not, (this comparison is made while the SWITCHER RATE control is fully counter-clockwise and the Blankers are OFF). If the ticks do decrease with the signal, check your input – it is probably monophonic. Or else, you are playing a monaural record (dubbed 78 rpm record) in which the ticks of the original recording are no longer stereophonic.

4. Adjusting the Switcher action:

A proper balance having been achieved, you are now ready to adjust the SWITCHER RATE control for optimum transient noise reduction. The ENHANCE/ SUPPRESS switch should be in SUPPRESS for selection of the quieter groove wall.

The operation of the Switcher is visible in the blinking of the three Switcher LEDs adjacent to the VU meters. Starting with the RATE potentiometer rotated fully counter-clockwise, there is no switching going on, and the middle LED lights steadily; the other two LEDs show no illumination at all (except in the case of a very loud tick).
Now, with the TNS IN/ TNS OUT switch in the IN position, rotate the SWITCHER RATE potentiometer clockwise. You will note that the CH.1 and CH.2 LEDs start to flicker more and more intensely as you rotate the control

further clockwise and that the center LED starts to lose intensity and also to flicker. This indicates the rapidity of the Switching action. As you increase the rotation, you should hear a decrease of the high frequency components of the crackle and ticks and, in some cases, of the hiss. Adjust the SWITCHER RATE control for maximum noise suppression. The optimum adjustment is usually when the three LED's are at about the same brightness. If the center LED glows less brightly than the other two, listen for an increase of vertical noise. If it occurs, back off the potentiometer, listening carefully for the optimum setting. For particularly noisy records, it might sound best to rotate the SWITCHER RATE control fully clockwise.

If you are getting very little Switching action and the record is not an exceptionally quiet-surfaced one, check the meter readings. Records vary greatly in recording level, and the input levels to the Audio Noise Suppressor should be adjusted so that the peaks of the speech or music come to or slightly above 0 VU. When doing meticulous transfer work, you may even prefer to play the low level passages at a different INPUT LEVEL control setting than for the high level passages. Also, if the record is a good copy on good, clean surfaces, there may not be much for the Switcher to do.

5. Other ways for checking the Switcher action:

With the SWITCHER RATE control at the optimum adjustment, put the ENHANCE/ SUPPRESS switch into ENHANCE (with the Blankers OFF). This will cause the Switcher to choose the noisier sidewall of the groove when it switches away from the mix signal. The contrast in audible noise between the two positions of the ENHANCE/ SUPPRESS switch will give you an exaggerated indication of the Switching action.

Another method is to put the MODE switch into VERTICAL. (again, make certain that the Blankers are OFF). You will then be listening to the vertical component. Listen for the noise transients. If there is little transient noise

audible in this position, this indicates that there is little for the Switcher to do. Now rotate the SWITCHER RATE control clockwise to hear the noise suppression action.

E. Adjustment of the Blanker Action:

1. Principle of operation of the Blankers:

Impulse noises on records are characterized by a high amplitude and a short duration. Their duration is so short that it is chiefly by virtue of their high amplitude that they are perceived as acutely as they are. Thus, a device that will limit noise impulses so that the amplitude does not appreciably exceed the level of the music (or other program material) at the moment of occurrence of the noise will reduce these noises to inaudibility or to a sufficiently low value so that they no longer constitute an annoyance.

The PACKBURN Blankers, clip noise impulses; as soon as one exceeds the amplitude of the wave envelope of the program material, at that point in time the instantaneous level is held until the amplitude of the noise impulse comes back to the program level, at which point the clipper lets go. Thus, there is a separate clipping action for each individual positive or negative pulse of the noise, with maximum preservation of the program material and the ability to cope with even the high rate of incidence of noises on 78 rpm records. The BLANKER RATE control establishes the sensitivity threshold.

2. Operation of the Blanker controls:

The Blankers are provided with a BLANKER ON/ BLANKER OFF switch, and a BLANKER RATE potentiometer. These simultaneously switch and control the Blanking operation of both channels. Blanker LEDs, one for CH. 1 and one for CH. 2, indicate when the blanker has operated.

The BLANKER RATE control has been designed to provide a large range of operation because different settings are optimum for different types of program

material and noise problems. As the BLANKER RATE control is rotated clockwise when the BLANKER ON/ BLANKER OFF switched to ON, the Blanker LEDs light more steadily to indicate more Blanker action. A 3:00 setting of the Blanker is a good setting for most records in good condition. For especially noisy records such as 78 rpm records with a lot of hiss or long playing records with scratches, higher settings might be beneficial. It is normal for the Blanker LEDs to illuminate during louder passages of the program material. If you hear disturbances caused by the blanker, do not hesitate to turn the RATE all the way down – the Blanker is still functioning at that setting. The LED circuit is devised to display only the blanking of the louder noises. As long as the Blanker is switched IN, however, it will be operating, even thought the LED may not be seen to flash.

Processing of Long Playing Monaural and Stereo Records Through the Transient Noise Suppressor Section

A. Equalization:

The stereo preamplifier that provides signal to the Audio Noise Suppressor can have an equalization curve intended for long playing records, such as the RIAA equalization curve.

Optimum results are achieved, however, if the preamplifier has a flat high frequency response characteristic, i.e., no rolloff, as has been recommended for 78 rpm playback. Proper treble equalization for long playing records is then achieved by using the ROLLOFF switch provided on the Audio Noise Suppressor. The ROLLOFF switch enables one of six published equalization curves. For more information about equalization curves, refer to Equalization of Phonograph Records. The preamplifier can have any convenient low frequency equalization without affecting optimum results.

B. Use of the Switcher:

For monophonic long playing records that have been carelessly treated, the Switcher will be effective in coping with the high frequency components of scratches, fingerprints, and dirt.

For stereo records, the switching action is not applicable. These are processed by putting the MODE switch in the STEREO position. In this position, the CH. 1 and CH. 2 input signals bypass the Switcher and are routed directly to the Blankers – one Blanker for each channel.

C. Use of the Blanker:

For monophonic long playing records, the fast rate of the Blanker will be advantageous in suppressing the noises that remain after the Switching action.

For stereo records, the BLANKER RATE control changes the Blanking sensitivity for both channels simultaneously. The two Blanker LEDs indicate the operation of the CH.1 and CH.2 Blankers.

The general remarks on the preceding page regarding adjustment of the BLANKER RATE control apply to long playing and stereo records.

The Continuous Noise Suppressor Section

A. Principle of Operation of the Continuous Noise Suppressors:

The Continuous Noise Suppressor is designed to reduce high frequency noises of a continuous nature (hiss). It is, basically a dynamic low-pass filter with a variable cutoff frequency between 2.5 kHz and 15 kHz. Thus, its action is confined almost exclusively to the overtone region of the musical spectrum, as its lowest cutoff frequency exceeds the pitch of the highest note of most musical instruments. The rolloff approaches 12 decibels per octave.

The cutoff frequency, rather than being responsive to the signal level only, is determined by the relation of the velocity component of the total local signal-plus-noise to the peak local signal-plus-noise in a selected octave bandwidth. Reproduction of musical transients is protected by a circuit that distinguishes between the musical transients and noise transients. As a result, the cutoff frequency normally remains unchanged due to a noise transient but rises rapidly when a musical transient is recognized.

B. Adjustment of the Continuous Noise Suppressor Controls:

The Continuous Noise Suppressors are provided with a FIXED/ VAR. switch, CONTROL DYNAMICS AND MINIMUM ADJUST controls, and a Frequency Meter. When the FIXED/ VAR. switch is put in FIXED, the Continuous Noise Suppressor is bypassed, indicated by a fixed off-scale reading of the frequency meter. The corner frequency is greater than 15 kHz. When the FIXED/VAR. switch is VAR., there is a variable cutoff frequency determined by the program signal and the settings of the CONTROL DYNAMICS and the MINIMUM ADJUST controls. Each of the two channels will experience the same variations of cutoff frequency in order to maintain stereo imaging, indicated by the single Frequency Meter.

C. Adjustment for Fixed Frequency Treble Control

1. Rotate the CONTROL DYNAMICS control fully counter-clockwise.

2. Adjust the MINIMUM ADJUST control. A setting of the corner frequency, indicated by the Frequency Meter, will range between about 2.5 kHz and 10 kHz. Since the setting is unaffected by the program material, the Continuous Noise Suppressor operated in this manner is a fixed frequency treble control.

D. Adjustment for Variable Cutoff Frequency Treble Control:

1. Rotate the CONTROL DYNAMICS control fully counter-clockwise and the MINIMUM ADJUST control fully clockwise.

2. While listening to the program material with particular attention to quiet passages, rotate the MINIMUM ADJUST control gradually in the counter-clockwise direction until the desired amount of hiss has been removed from the signal without dulling of sound in the quiet passages. Ignore for the moment any dulling of the sound in the louder passages. The MINIMUM ADJUST control sets the low limit point for the cutoff frequency.

3. Listen again but this time give attention to the louder or more brilliant passages. Gradually rotate the CONTROL DYNAMICS control in a clock-wise direction to a setting where there is no dulling of the sound in the louder passages. The Frequency Meter should now be indicating a variable cutoff frequency that quickly rises and falls in relationship to the program material. Thus the CONTROL DYNAMICS control sets the high limit point for the cutoff frequency, dependent on the program material.

4. For critical listening, it might be necessary to readjust the two controls of the Continuous Noise Suppressor. The Frequency Meter is a valuable tool

that affords assistance. You will note from the meter action that the Continuous Noise Suppressor responds principally to the high frequency content of the signal so that, when there is any appreciable amount of high frequency energy to be reproduced, the cutoff frequency will swing up. Normally, the high frequency energy in such passages in the program material will mask the noise, so that you will be unaware of any increase of noise content when the cutoff frequency rises. In the case of noisy records, as there is a higher level of noise to be masked, you may have to make some sacrifice in program transients by reducing the CONTROL DYNAMICS control if an audible swishing sound occurs.

E. Noise Suppressor Coordination:

Once the Continuous Noise Suppressor controls have been properly set, the SWITCHER RATE and BLANKER RATE controls might have been set more sensitively than necessary. For careful listening, this is a good opportunity to go back and adjust these settings.

Bypassing the Audio Noise Suppressor

A. Switching Out the Noise Suppressors:

You can get an “IN-OUT”, or "A-B” comparison by using the TNS IN/TNS OUT switch and the FIXED/VAR. switch. This comparison will be valid regardless of the setting of the other switches and controls. It is only when you wish to remove the Audio Noise Suppressor completely from the circuit that special considerations arise.

B. Bypass Comparisons Involving a Stereo Record

When the POWER ON/ POWER OFF switch is OFF or when the ANS IN/ANS OUT switch is in OUT, the unit is totally removed from the circuit by means of a relay. The relay connects input CH. 1 directly to output CH. A and input CH. 2 directly to output CH. B. If the outputs of the Audio Noise Suppressor are connected to a stereo amplifier, you will then be hearing a stereo reproduction of whatever is connected to the inputs of the Audio Noise Suppressor.

In making "A-B” comparisons by means of the ANS IN/ANS OUT switch, the ROLLOFF switch should be in the 0 position; otherwise there will be a change in tone quality from IN to OUT. The INPUT LEVEL and OUTPUT LEVEL control settings should be coordinated so that the Audio Noise Suppressor has unity gain, otherwise there will be a change in loudness from IN to OUT.

C. Bypass Comparisons Involving a Monophonic Record

To obtain valid “A-B”comparison you need to follow specification B. In addition, the

amplifier following the Audio Noise Suppressor should be put into the Mono mode, so as to mix the signals coming into it. There can still be some disparity if the two signals going into the Audio Noise Suppressor are mis-matched considerably in amplitude.

True “A-B” comparison of vertical-cut recordings is more challenging, requiring a phase inversion in one of the channels ahead of the Audio Noise Suppressor. Since the phasing of the input signals has been corrected, the MODE switch of the Audio Noise Suppressor can be set to LATERAL where there is no phase inversion. If you attempt to make an “A-B” comparison without this phasing consideration, you will get a curious out of phase spatial effect if the output amplifier in the Mono mode, or a cancellation effect if the output amplifier in the Stereo mode.

Suggestions for Optimum Processing of Historic Recordings

A. Centering and Flatness

It has been our experience that most low-frequency thumps in the reproduction of 78s are due to warped or off-center records. Centering and flattening of the disc are recommended for the elimination of these noises. Off-center discs also, sometimes, have a once-per-revolution swish.

The Audio Noise Suppressor has been designed so that its operation will not be upset by low frequency thumps. It will, however, not reduce these thumps beyond the point that they are reduced by normal monophonic playback.

The Audio Noise Suppressor frequently will act to reduce the swish.

B. Choice of Optimum Stylus

The stylus should be chosen that gives the minimum noise and clearest sound with the Transient Noise Suppressor in operation. It has been our experience that conical styli reproduce some records with less hiss than do elliptical styli, although with louder reproduction of the ticks. Since the Packburn Audio Noise Suppressor suppresses the ticks, some owners have found that the conical stylus is optimum in those cases where harmonics greater than about 7 to 8 kHz are not present (early accoustical recordings, for example). The elliptical stylus, having a superior resolving power, is best when high frequency harmonics and musical transients are present (electrical recordings and late accoustical recordings.)

It is also advisable to audition the two sidewalls of the groove to determine that they sound alike. If one side wall sounds hissier than the other, try changing styli. It has been our experience

that the hiss of the two channels can be equated, in most cases, by proper choice of stylus.

We have encountered cases, especially with acetate discs, where one sidewall of the groove reproduces with more hiss than the other sidewall, regardless of stylus choice. Sometimes the hiss even shifts from one sidewall to the other. In such cases, it is especially advisable to experiment with the Switching rate.

If one sidewall is consistently hissier than the other, you may find it preferable to set the MODE switch to select the quieter channel and to process the record through the Blanker and Continuous Noise Suppressor only. The mixing of the two channels below 300 Hz serves to minimize the vertical noise when playing from one sidewall of the groove with the Audio Noise Suppressor.

C. The ENHANCE Position of the ENHANCE/ SUPPRESS Switch

This is useful in diagnosing what the Switcher is accomplishing. The ENHANCE position will allow you to audition the most noisy of the CH1, CH2, or monaural mix that the Switcher is selecting for playback.

D. The Vertical Component

In monophonic lateral-cut recordings, the vertical component of stylus motion is caused by noise components, such as surface noises of all kinds, turntable rumble, record warpage, off-center playback, surface uneveness and by signal components introduced by tracking error and tracing error, including "pinch effect". Listening to the vertical component can be a valuable diagnostic procedure: Put the MODE switch into VERTICAL position, rotate the SWITCHER RATE control fully counter-clockwise, and switch the

Blankers OFF. If your playback equipment is in proper alignment and you are using the Transient Noise Suppressor according to instructions, the vertical component of any reasonably noisy record should consist almost entirely of noise.

By rotating the CHANNEL BALANCE control, you should be able to find a position at which the program signal nulls. In fact, that is where the control should normally be set. Once the two signals are in balance, the vertical component can be auditioned for its nature or for difficulties such as record wear.

The Rolloff Switch

When playing a record into the PACKBURN Audio Noise Suppressor using a flat treble response characteristic in the stereo preamplifier, the ROLLOFF switch provides six selectable treble equalization characteristics applicable to records from the 78 rpm era to modern times.

In regard to the low frequency characteristics of these curves, refer to Equalization of Phonograph Records in the Table of Contents.

Curve	ROLLOFF Switch Setting (dB)	Reference
Most 78s before 1940	Mostly 0	
HMV 78s	0	Radiotron, Read
FFRR	5	Radiotron, Read
RCA, late 78s	8.5	Read
RCA 78, 45, 33 1/3	12	Radiotron
AES	12	Tremaine
Orthoacoustic	14	Radiotron, Tremaine
RIAA	14	Tremaine
Decca (London) LP	14	Radiotron
NARTB & NAB	16	Radiotron, Read
Columbia late 78s	16	Read
Columbia Microgroove (pre-RIAA)	16	Read
Vertical	16	Tremaine

Rolloff switch settings 5,12,14, and 16 dB have slopes of 6 dB per octave.

Rolloff switch setting 8.5 dB has a slope of 2.5 dB per octave.

<u>References</u>:

Langford-Smith,*Radiotron Designer's Handbook Fourth Edition*,SydneyWireless Press, 1953

Read, *The Recording and Reproduction of Sound Second Edition*, Sams, Indianapolis, 1952

Tremaine, *Audio Cyclopedia*, Howard W. Sams, Indianapolis, 1969

Vertical-cut Records

Vertical-cut records differ fundamentally from lateral-cut records in that the signal is in the bottom of the groove - not on the two sidewalls. Therefore, there are not two legitimate signal channels that a Switcher can choose from. However, those who have been working extensively with cylinders tell us that there appears to be a certain amount of lateral component in some cylinders, and that the Switcher is of some utility in reducing noise. We have experienced that the Switcher reduces noise transients to a small extent in the playback of Edison Diamond Discs. But the SWITCHER RATE control should not be turned up very far.

Edison Diamond Discs and Pathe vertical-cut records typically have such a high degree of lateral noise that the records have to be reproduced with total - or almost total - cancellation of the lateral component. The more certain benefit of the Switcher stage when playing back these records is to use the CHANNEL BALANCE control for the cancellation of the lateral component to the maximum extent (canting). The BALANCE control adjustment is likely to differ between records. Auditing in both LATERAL and VERTICAL positions of the MODE switch can help you determine the optimum setting of the CHANNEL BALANCE control.

The CH.1 and CH.2 positions of the MODE switch are not intended for auditing vertical-cut records. The low frequency components of the two channels (frequencies below 300 Hz) would be mixed in the wrong polarity relationship when the switch is in either of these two positions.

Recommendations for Preserving Perishable Media

Regarding perishable media having limited life expectancy, it is our recommendation that the Audio Noise Suppressor be used to determine the optimum condition for playback. Then a stereophonic transfer can be made for permanent storage. This stereophonic transfer will then be available for processing through the Audio Noise Suppressor or through some improved device that the future of audio should bring.

The two channels of signal should be recorded in such a manner than the response curves match within a close tolerance. It is also important that the signals from the two channels be coincident. For example, if the perishable medium is a reel-to-reel tape, head azimuth adjustment of the tape recorder is critical. When playing back such a tape, if the level of high frequency noise increases while turning up the SWITCHER RATE control, the playback head is not accurately aligned with the tape. To adjust the alignment, use either a phase monitor oscilloscope (see below) or audition the difference signal (MODE switch in VERTICAL).

Transferring Records at Half Speed

If you have to play a record at half speed or at some other speed considerably removed from normal to make a transfer, it is advisable that the dubbing be played back on pitch into the Audio Noise Suppressor. Otherwise, you will not be taking advantage of optimized time constants in the noise suppression circuits.

Before making a transfer, it may be of profit to audition the groove walls and/ or the vertical component using the CH.1, CH. 2 or VERTICAL settings of the MODE switch for determining the optimum stylus size.

Tape Recordings – Broadcasts – CD Records

Magnetic tape recordings and broadcasts, whether live or on tape, can be processed very successfully using the Audio Noise Suppressor.

Stereo tapes and broadcasts can be processed with the MODE switch set to STEREO, which bypasses the Switcher. The Blanker removes transient noise, if there is any to suppress, and the Continuous Noise Suppressor can do an effective job of removing hiss.

If the stereo tape or broadcast is a copy of 78 rpm disks, re-equalization of the signal, before the Audio Noise Suppressor, may be required. Copyists sometimes transferred 78s using the RIAA playback curve, if that was the only equipment that was available.

We claim no applicability of the Audio Noise Suppressor to CDs mastered from original digital tapes. However, CDs derived from 78s, from old movie sound tracks or from master tapes that antedate the introduction of encode/decode noise reduction devices are all instances where the Audio Noise Suppressor has a role to play. Such CD records would be processed the same as a stereo broadcast or tape, as described above. When playing CD records that do not require noise reduction, the Audio Noise Suppressor can be bypassed by turning the POWER SWITCH to OFF.

Copying Records in General

When using the Audio Noise Suppressor with second or third generation transfers, the Blanker has to be relied on to provide whatever transient noise suppression is to be achieved. It must be recognized that transfers could have been subjected to equalization, compression and limiting. All of these circumstances tend to dull the leading edge of a noise transient with the result that the Blanker has a harder job of detecting the noise transient. As a general rule, the Transient Noise Suppressor will be most effective when the first generation record is played back. The Continuous Noise Suppressor does not rely on the same cues, and will be effective in playing back transfers. It might have more work to do if the copying process created a hiss buildup.

Carefully made stereo tapes of a monophonic disk or cylinder – especially a digital tape – can provide good results, as the Switcher can be employed. There should be no appreciable degradation of the noise transients that would reduce the effectiveness of the Blanker.

Suppression of Dropouts in Monophonic Tape Recordings

Recordings made on tape can suffer from random dropouts. Full-width monophonic tapes can be played using stereo equipment. If the tape is played with the ENHANCE/ SUPPRESS SWITCH in ENHANCE, the Switcher will act to select the momentarily louder of the two channels, i.e., select for least drop-out. Transient noises and hiss that may be in the tape recording can be removed by the Blanker and Continuous Noise processors.

Other Recording Media

We have had no experience with processing wire or film recordings. However, the Blanker should be effective in reducing noise transients in any recording that is electrically reproduced, likewise the Continuous Noise Suppressor for hiss.

The Transient Noise Suppressor will not recognize noise transients on recordings in which there is an acoustic coupling in the reprocessing chain. But the Continuous Noise Suppressor is effective in reducing hiss from any source.

The VU Meters

The VU Meters are, strictly speaking, peak reading meters. They are connected following the INPUT LEVEL control but preceding the BALANCE control. The purpose of the meters is to assure that the Audio Noise Suppressor is not overloaded. Adjustment of the BALANCE control has not effect on the meter readings. The BALANCE control serves as a fine level setting whose setting is best left to the ear.

The VU meters also follow the anti-RIAA equalization circuit, when this circuit has been activated at the factory (refer to Installation Instructions for more information.) The anti-RIAA (75 μs) circuit emphasizes the high frequencies of the input signals. Since the VU meters follow the equalization circuits (a circuit provided in each channel), they are displaying the true input signal being processed

The balance control on your pre-amplifier ahead of the Audio Noise Suppressor should be adjusted so that the VU Meters yield approximately equal readings on the program material. If one channel has louder ticks than the other, its meter can be expected to register a higher level. Your adjustment should be to the program material: music or speech, whose peak readings should be at about or slightly above 0 VU. If an occasional tick causes the meter needle to go off scale, do not worry about it if the program levels are correct.

Adjustment of the Tone Controls on the Pre-Amplifier Ahead of the Audio Noise Suppressor

The adjustment of the bass tone control has no effect on the operation of the Audio Noise Suppressor. The concern is that the treble frequency response of the two channels match in order that the Switcher is used to its best advantage.

Adjustment can be made as follows:

A. Set the treble controls on your pre-amplifier for flat treble.

B. Play a monophonic record and adjust your pre-amplifier balance and level controls, and the LEVEL control on the Audio Noise Suppressor for good meter readings.

C. Set the MODE Switch in VERTICAL.

D. Adjust the BALANCE control for best signal cancellation.

E. Adjust the treble control on just one channel of your pre-amplifier, seeing if you can exact better signal cancellation.

F. Readjust the BALANCE control if necessary.

Installation of a Stereo Equalizer before the Audio Noise Suppressor

A. Instances where such an application may be desirable include:

1. Conversion of preamplifier RIAA treble rolloff to flat treble response:

   The table specifies the recommended equalizer setting for achieving a flat high frequency response from preamplifier with RIAA equalization. After the settings have been made, check the match of the two channels using Instruction B, which follows.

Frequency (kHz)	Setting (dB)	Frequency (kHz)	Setting (dB)
1	0	7	10.8
2	+2.6	8	11.9
3	+4.8	9	12.9
4	+6.6	10	13.7
5	+8.2	11	15.3
6	+9.6	12	17.1

Values are from Tremaine, *Audio Cyclopedia*, Howard W. Sams, Indianapolis, p. 668

2. Compensation of stereo tapes or recorded media with frequency imbalance.
3. Compensation of tapes with insufficient high frequency energy for the Switcher or Blanker to recognize noise transients well.
4. Equalization of long play transfers from 78s that have been made with excessive treble rolloff.
5. Monophonic disc recordings in which the two sidewalls do not have equal fidelity (if such exist).

B. Playing a record or stereo transfer of a monophonic record through the Switcher:

When using the Switcher, it is important that the two channels of your equalizer be as identical as possible in frequency response. The following procedure is recommended:

1. With the equalizer out, adjust the CHANNEL BALANCE control for optimum null with MODE switch in proper position to audition difference signal.
2. Restore the MODE switch to normal position. Adjust the equalizer to optimum sound (both channels to sound the same).
3. Put the MODE switch back into the position that yields the difference signal (VERTICAL or LATERAL position). Make slight readjustments of the equalizer to obtain an optimum null of the program material.
4. Alternatively, a phase monitor oscilloscope may be used to achieve a proper balance in the equalizer adjustment. Refer to Uses of the Phase Monitor Oscilloscope (next section).

Uses of a Phase Monitor Oscilloscope

The cathode ray oscilloscope is a valuable tool for checking the accuracy of alignment of a stereo system used to play back monophonic records or stereo tapes of monophonic records into the Audio Noise Suppressor.

A. Setting the Phase Monitor Oscilloscope:

1. Adjust the input signals to the Audio Noise Suppressor for approximately equal levels.
2. Connect the vertical and horizontal amplifier inputs of the oscilloscope to the CH.1 input of the Audio Noise Suppressor.
3. While playing the record, adjust the controls of the oscilloscope until the display (the vector sum is about 45 degrees from the vertical.
4. Now, connect either the horizontal and vertical amplifier inputs to CH. 1 and CH.2 two audition the vector differences between the two input signals.

B. Transient Noise:

Vector difference signal that appears as noise bursts at other than the 45 degree incline can be suppressed by the Switcher. The Blanker can suppress star bursts in all directions. Mistracking will cause the oscilloscope to display an ellipse rather than a straight line.

C. Mistracking of the Record:

A relative mistracking of the record will appear as departures of the signal from the 45 degree incline..

D. Equalization Match of the Two input signals to the Audio Noise Suppressor:

A relative mismatch of the frequency response between the two input signals will cause the oscilloscope to display an ellipse at those particular frequencies rather than a straight line. If a stereo equalizer is inserted between your preamplifier and the Audio Noise Suppressor, matching of the equalizer can be established using the oscilloscope. A series of tones are fed into both inputs of the equalizer. For each tone, adjust the equalizer so that the signal is displayed along a 45 degree line.

E. Alignment of a Tape Recorder Head:

This is most accurately accomplished by pre-recording simultaneously in both channels a series of oscillator tones starting at the low frequency end of the audio spectrum.

Trouble - Shooting Procedures

1. *There is no output signal when both the POWER ON/ OFF is ON, and the ANS IN/OUT switch is IN.*

   Check that your pre-amplifier has been connected to the input receptacles, CH.1 and CH.2, and that the output cable has been connected to the output receptacles, CH. A and CH. B.

2. *The Switcher is not reducing noise at all even though a noisy monophonic record is being played through a stereo pre-amplifier with proper equalization to the Audio Noise Suppressor, and the Switcher controls have been properly adjusted.*

   Set the MODE switch to VERTICAL. If there is a reduction in both the signal component and transient noise component, the incoming signals are in fact monaural. The record itself might be a 78 rpm dubbing in which the ticks are equally combined in both channels. Try a different record. If this doesn't work, check your equipment. The phonograph cartridge might be monaural. Check its terminals. The cartridge could be stereophonic but operating in monaural due to a shorting wire between two of its terminals. Follow manufacturer instructions for converting the cartridge to stereo.

3. *The CH.1 or CH. 2 Switcher LED is overly favored.*

   This probably indicates that there is a bad connection, perhaps a bad cable, in the circuit ahead of the Audio Noise Suppressor and/ or an extremely out-of-balance signal level.

   If there is no signal or reduced signal to one input, this is indicated by the VU Meters and by a dull sound when the MODE switch selects that channel for playback. The dull sound is due to the of low frequency components from the operating channel being fed into the disconnected channel through the low frequency mixing circuit. Good, non-intermittent connections are important for the operation of the Switcher in

particular.

4. *When the MODE switch is in VERTICAL and a monophonic record is being played, there is no setting of the BALANCE control that produces good signal cancellation.*
   The Audio Noise Suppressor is provided with professional balanced inputs. If the RCA connectors are being used, it is good practice to ground the unused inputs (pin 2 of CH.1 and CH.2 XLR sockets.)

5. *When the SWITCHER RATE control is turned up (clockwise rotation), the noise gets worse, not better.*
   Make sure that the ENHANCE/ SUPPRESS switch is in SUPPRESS. The Switcher will then be choosing the quieter input signal for playback instead of the nosier signal.

6. *The switcher is not producing a good result when playing a stereo tape recording made from a monophonic record.*
   Check the azimuth alignment of the playback head with reference to the tape that you are playing by using the VERTICAL position of the MODE switch or with a phase monitor oscilloscope. Refer to the Table of Contents.

7. *The Switcher and Blanker are not operating even though the pre-amplifier to the Audio Noise Suppressor has the correct equalization per instructions, and the INPUT LEVEL control has been properly adjusted.*
   The TNS IN/ OUT could be in the OUT position, de-activating the Transient Noise Suppressor (i.e. Switcher and Blanker.)

8. *There is not much Frequency Meter action even though the FIXED/ VAR. switch is in VAR. and the Continuous Noise Suppressor controls have been adjusted according to instructions.*
   This could be an indication that the record is especially hissy, or that the high

frequency levels in the signal to the Audio Noise Suppressor have been unduly exaggerated. This could happen, for example, if your pre-amplifier has a flat treble characteristic and you have had the PACKBURN factory set for RIAA cancellation. This factory setting is intended for use with a pre-amplifier having an RIAA treble rolloff characteristic.

The following test determines whether the factory setting has been activated: Set the ROLLOFF switch to 0, the FIXED/ VAR. switch to VAR., and use the ANS IN/ OUT switch to identify a brighter sound in the IN position.

9. *When playing a stereo record or CD, the sound is garbled, especially in loud passages.*

   Make sure the MODE switch is in STEREO. If the MODE switch is in LATERAL or VERTICAL, the Switcher will chop up the music as it tries to play the instantaneously quieter of the two stereo input signals.

10. *None of the above applies.*

    Before contacting us, we recommend having certain information on hand, preferably taking down a few notes while observing the problem. Here are types of questions we will ask you:

    What problem is being experienced?

    What are the control and switch settings on the Audio Noise Suppressor (described in terms of clock setting)?

    Is the problem in just one output channel? Which channel (A or B) is it in?

    If you swap the input conductors, does the problem follow the conductor (in which case the problem is very likely to be ahead of the Audio Noise Suppressor.

    If you try varying each of the controls, are there any that have an effect on the problem?

Equalization of Phonograph Records

A selection of pre-established equalization curves built into record-playing equipment for playing 78s and early long playing records is no longer the necessity that it was, due to the prevalence of graphic equalizers. However, making use of pre-established curves when playing the recording does free the graphic equalizer to cope with the other equalization problems that a recording may present.

Traditionally, the inherent equalization curves used for cutting electrical recordings have been specified in terms of a “bass-turnover frequency” and “treble pre-emphasis.” It is intended that the playback equalization curve be the inverse of the equalization curve used during manufacture of the record.

Bass-turnover is the attenuation of low frequencies during the record manufacturing in order to limit groove modulation. The limitation was designed with early playback equipment in mind, to maintain satisfactory groove tracking and reduce record wear. Most of the published recording curves for 78 rpm records indicate that the bass attenuation (or "constant amplitude") portion of the curves have a 6 dB per octave slope extending down to 25 Hz. The “turnover frequency” is the frequency at which the attenuation commences, “the 3 dB point.” During playback, the pre-amplifier has an inverse curve that boosts (restores) the low frequencies.

The Columbia LP curve, the RCA Orthocoustic and New Ortho-phonic curves, and the RIAA curve additionally have a low frequency "shelf" below which the attenuation in the recording process levels off. The purpose of this leveling-off is to effect a reduction in turn-table rumble when the record is played back with the complementary curve.

Treble pre-emphasis appears to have been first introduced for reducing noise in broadcast transcriptions. It was eventually applied to some 78 rpm records and to all

long playing records. Noise reduction is accomplished during playback of the record using an equalization curve that is the inverse of the treble pre-emphasis curve, known as a “high frequency “rolloff”curve. The drawback to applying treble boost during production of 78 rpm records was that millions of record players were in service which had been designed with a flat treble characteristic (no rolloff.) With the introduction of the Lp record and a specially designed record player to reproduce it, Columbia Records was able to establish treble pre-emphasis/ high frequency rolloff as a basic characteristic for all long playing records. In 1953 the recording industry standardized on the RIAA playback curve.

Electrical manipulation of the recording characteristic was, of course, unknown in the era of acoustical recording. However, in reproducing acoustical recordings electrically, one can choose an equalization curve to provide an optimum tonal balance or to suit a particular purpose For example, the 0 turnover (flat bass response) is useful in achieving the shallow-sounding bass reproduction typical of the acoustic phonograph.

In compiling a chart of recommended settings of the ROLLOFF switch of the Audio Noise Suppressor, we also felt that it would be a distinct service to tabulate the differences between the lower frequency portion (from 1 kHz down) of the RIAA curve and other equalization curves frequently encountered on old records. The chart specifies the difference, in decibels, between the desired curve and the RIAA curve and will be useful in adjusting your graphic equalizer if your pre-amplifier has an RIAA curve.

However, it must be recognized that the decibel calibrations printed on the front panel of inexpensive octave equalizers are not necessarily accurate and that adjacent slider settings interact somewhat. Also, a graphic equalizer provides a rippled response curve rather than the smooth curve achieved by a dedicated equalizer. However, the chart "gets you in the ball park" and you can proceed to

make further adjustments in accordance with your listening judgment, as you should, also, with the ROLLO FF settings.

The Table of Playback Equalization Constants

* The ROLLOFF switch in the 8.5 dB setting has a 2.5 dB per octave slope. All other treble rolloffs are 6 dB per octave.

** This published curve has a rolloff of 12 dB per octave. Using the 14 dB setting of the ROLLOFF switch, you can match the curve by applying the following corrections with a 1/3 octave equalizer:

Frequency (kHz)	Setting (dB)
2-5	+2
6.2	+1
8	-1
10	-4
12.5	-6
16	-8
20	-12

References:

Tremaine, *Audio Cyclopedia,* Howard W. Sams, Indianapolis 1952 & 1969

Read, *The* Recording *and Reproduction of Sound*, revised and enlarged Second Edition, Sams, 1952

F. Langford-Smith, ed., *Radiotron Designer's Handbook*, 4th Edition, Sydney-Wireless Press, 1953), especially Chapter 17, "Reproduction from Records."

Playback Equalization Constants for Phonograph Recordings

Record or Curve	Rolloff at 10 kHz (dB)	Turnover (Hz)	Shelf (Hz)	Correction from RIAA Curve at Listed Frequency in Hz					
				1K	500	250	125	62	31
250 Hz Turnover (78s)	Mostly 0	250		- 1	- 2	- 3	- 5.5	- 4	+ 1.5
HMV 78s	0	250							
FFRR 78s	5	250							
Decca (London) Long Play (Pre-RIAA)	14	250							
Columbia 78s (Late)	16	300		- 1	- 1.5	- 2.5	- 4	- 2.5	+ 1
Vertical Transcriptions	14 **	300							
AES	12	400		-.5	- 1	- 2	- 2	0	+ 3.5
500 Hz Turnover (78s)	Mostly 0	500		0	0	0	0	+ 2	+ 5.5
RCA 78s (Late)	8.5 *	500							
RIAA and RCA New Orthophonic	14	500	50	0	0	0	0	0	0
NARTB and NAB	16	500	50						
Columbia Lps (Pre-RIAA)	16	500	100	0	0	0	- 1.5	-3.5	-5
RCA 45s	12	600	50	+.5	+1	+1.5	+1.5	+1.5	+1.5
700 Hz Turnover (78s)	Mostly 0	700		+1	+1	+2	+3.5	+5	+8.5
RCA Orthacoustic	16	700	50	+1	+1	+2	+2.5	+1.5	0
1,000 Hz Turnover (78s)	0	1000		+2	+4	+6	+6	+7	+10.5
Flat Response Curve	0	0		0	-4	-7	-12	-16	-18.5

Input/ Output Schematic and Block Diagram

For models 323 A, 323 AA

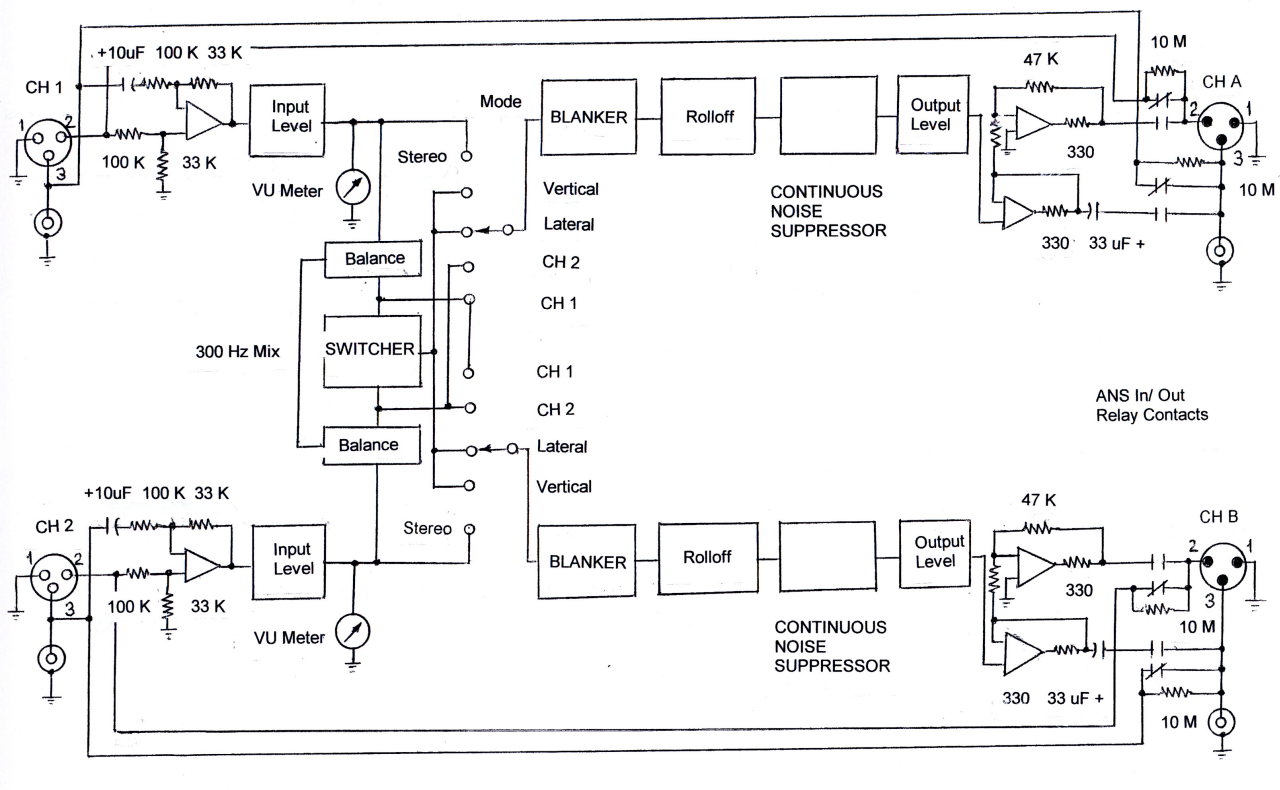

PACKBURN® *electronics inc.*

P.O. Box 226, Syracuse, NY 13215 USA

Ph. 315-476-9121